19-0946; Rev 1a; 12/94

MAXIM

Dual/Quad RF/Video Switches

General Description

The IH5341 and the IH5352 are dual and quad, single pole single throw (SPST) switches designed specifically for switching RF and video signals. Maxim's IH5341 and IH5352 incorporate an enhanced series-shunt-series structure, providing 70dB of OFF isolation and cross coupling rejection (an additional 10dB compared with other manufacturers' products).

Both devices can be operated with supplies ranging from ±5V to ±15V. The switches typically have a t_{ON} = 160ns and a t_{OFF} = 70ns, assuring break-before-make switching. The channel thruput resistance of 50Ω provides excellent matching to video impedances. In the D.C. state, with switches being either on or off, power supply quiescent currents are typically 100nA. This limits the quiescent current drain to 3μ watts—ideal for portable equipment.

Applications

These devices are used in applications requiring the routing, blocking or switching of video or RF signals such as:

Commercial TV Cameras
Video Special Effects
Low Power RF Switching
Radar Switching
Mil and Space Communications

Typical Operating Circuit

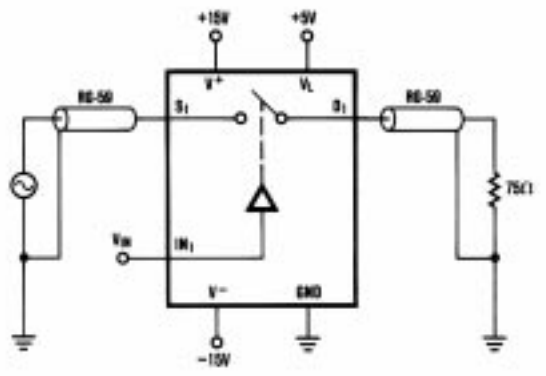

75Ω Video Switch
(Only one channel shown)

Features

- "OFF" Isolation ≥ 70dB @ 10MHz
- Cross Coupling Isolation ≥ 70dB @ 10MHz
- rDS(ON) < 75Ω, < 3dB Loss from DC to 100MHz
- ±5V to ±15V Operating Supply Range
- Supply Currents < 1μA
- Fast, Break-Before-Make Switching (70ns/160ns typ.)
- Monolithic, Low Power CMOS Design

Ordering Information

PART	TEMP. RANGE	PIN-PACKAGE
IH5341CPD	0°C to +70°C	14 Plastic DIP
IH5341CWE	0°C to +70°C	16 Wide SO
IH5341C/D	0°C to +70°C	Dice*
IH5341EPD	-40°C to +85°C	14 Plastic DIP
IH5341EWE	-40°C to +85°C	16 Wide SO
IH5341MJD	-55°C to +125°C	14 CERDIP**
IH5341MTW	-55°C to +125°C	10 TO-100
IH5352CPE	0°C to +70°C	16 Plastic DIP
IH5352CWE	0°C to +70°C	16 Wide SO
IH5352C/D	0°C to +70°C	Dice*
IH5352EPE	-40°C to +85°C	16 Plastic DIP
IH5352EWE	-40°C to +85°C	16 Wide SO
IH5352MJE	-55°C to +125°C	16 CERDIP

* *Contact factory for dice specifications.*
** *Contact factory for availability and processing to MIL-STD-883.*

Pin Configurations

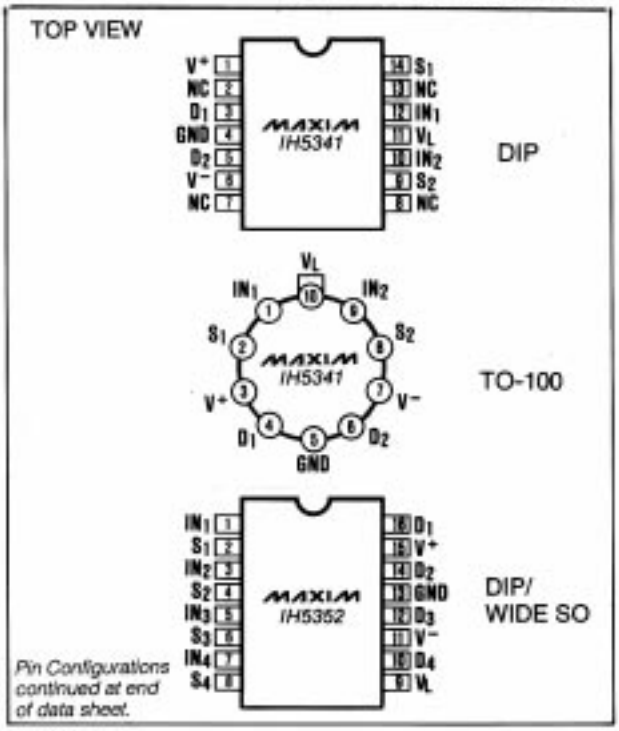

Pin Configurations continued at end of data sheet.

For free samples & the latest literature: http://www.maxim-ic.com, or phone 1-800-998-8800

Dual/Quad RF/Video Switches

ABSOLUTE MAXIMUM RATINGS

Supply Voltages V+ and V- ..... ±17V
Current in Terminal 50mA
Analog Input Voltage ..... V+
Operational Temperature Range ..... ±30V
(M Version) ..... -55°C to +125°C
(E Version) ..... -40°C to +85°C
(C Version) ..... 0°C to +70°C

Continuous Power Dissipation (T_A = +70°C)
14-Pin Plastic DIP (derate 10.00mW/°C above +70°C) 800mW
16-Pin Plastic DIP (derate 10.53mW/°C above +70°C) 842mW
16-Pin Wide SO (derate 9.52mW/°C above +70°C) 762mW
10-Pin TO-100 (derate 6.67mW/°C above +70°C) 533mW
Storage Temperature Range ..... -65°C to +150°C
Logic Control Voltage ..... V+ to V-
Voltage on VL Pin ..... V+ to V-
Lead Temperature (Soldering, 10sec) ..... +300°C

Stresses beyond those listed under "Absolute Maximum Ratings" may cause permanent damage to the device. These are stress ratings only, and functional operation of the device at these or any other conditions beyond those indicated in the operational sections of the specifications is not implied. Exposure to absolute maximum rating conditions for extended periods may affect device reliability.

ELECTRICAL CHARACTERISTICS

(V^+ = +15V, V_L = +5V, V^- = -15V, T_A = 25°C unless otherwise specified)

PARAMETER	SYMBOL	CONDITIONS	TYP (Note 1)	M GRADE DEVICE			I/C GRADE DEVICE			UNITS
				-55°C	+25°C	+125°C	-40/-20/ 0°C	+25°C	+85/ +70°C	
Supply Voltage Ranges Positive Supply Logic Supply Negative Supply	 V^+ V_L V^-	(Note 3)	 4.5 > 16 4.5 > V^+ -4 > -16		 5 to 15 5 to V^+ -5 to -15			 5 to 15 5 to V^+ -5 to -15		V
Switch "ON" Resistance (Note 4)	$r_{ds(ON)}$	V_D = -5V to +5V I_S = 10 mA, V_{IN} = 2.4V V_D = -10V to +10V		75 125	75 125	100 175	75 150	75 150	100 175	Ω
Switch "ON" Resistance	$r_{ds(ON)}$	V = V_L = 5V, V_{IN} = 3V V^- = -5V, V_D = ±3V		250	250	350	300	300	350	
On Resistance Match		I_S = 10mA, V_D = ±5V	5							
Switch "OFF" Leakage (Notes 2 and 4)	$I_{D(OFF)}$ or $I_{S(OFF)}$	$V_{S/D}$ = +5V to -5V V_{IN} = 0.8V $V_{S/D}$ = +14V to -14V			±1 ±1	50 50		±2 ±2	100 100	nA
Switch "ON" Leakage	$I_{D(ON)}$ + $I_{S(ON)}$	V_D = +5V or -5V V_{IN} = 2.4V V_D = +14V to -14V			±1 ±1	100 100		±2 ±2	100 100	
Input Logic Current	I_{IN}	V_{IN} > 2.4V or < 0	0.001	1	1	10	1	1	10	µA
Positive Supply Quiescent Current	I^+	V_{IN} = 0V or +5V (Note 5)	0.01	1	1	10	1	1	10	
Negative Supply Quiescent Current	I^-	V_{IN} = 0V or +5V (Note 5)	0.01	1	1	10	1	1	10	
Logic Supply Quiescent Current	I_L	V_{IN} = 0V or +5V (Note 5)	0.01	1	1	10	1	1	10	

AC ELECTRICAL CHARACTERISTICS

V^+ = +15V, V_L = +5V, V^- = 0V, T_A = +25°C

PARAMETER	SYMBOL	CONDITIONS	MIN	TYP	MAX	UNITS
Switch "ON" Time	t_{ON}	See Figure 1		160	300	ns
Switch "OFF" Time	t_{OFF}	See Figure 1		70	150	
"OFF" Isolation Rejection Ratio	OIRR	See Figure 2 (Note 6)	70	80		dB
Cross Coupling Rejection Ratio	CCRR	Figure 3 (Note 6) IH5341 IH5352	70 66	80 72		
Frequency where $r_{DS(ON)}$ = 0.7 x DC		(Note 6)	100			MHz

Note 1: Typical values are not tested in production. They are given as a design aid only.
Note 2: Positive and negative voltages applied to opposite sides of switch, in both directions successively.
Note 3: These are the operating voltages at which the other parameters are tested, and are not directly tested.
Note 4: The logic inputs are either greater than or equal to 2.4V or less than or equal to 0.8V, as required, for this test.
Note 5: Maximum values shown are for the dual (IH5341). They are doubled for the quad (IH5352).
Note 6: All AC parameters are sample tested only. Test circuits should be built on copper clad ground plane board, with correctly terminated coax leads, etc.

Test Circuits

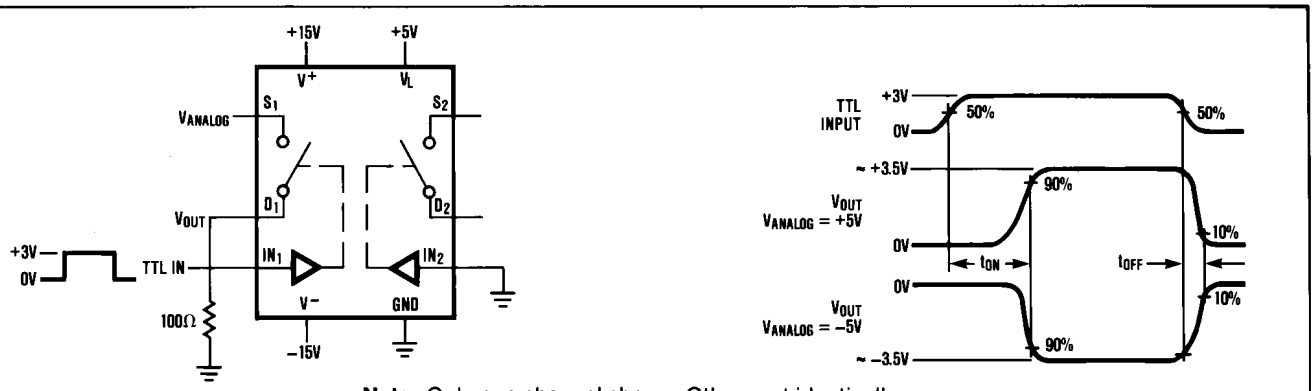

Note: Only one channel shown. Others act identically.

Figure 1. Switching Time Test Circuit and Waveforms

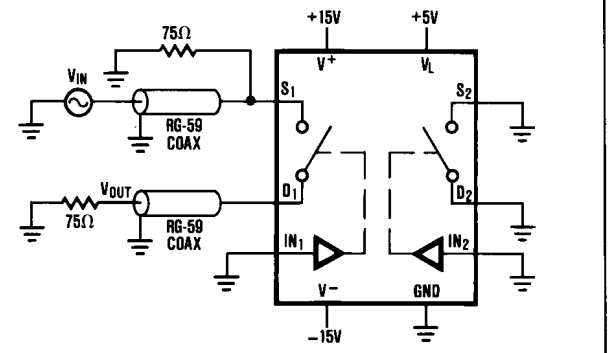

V_{IN} = ±5V ($10V_{p-p}$) @ f = 10MHz OIRR = $20 \log \frac{V_{IN}}{V_{OUT}}$

Note: Only one channel shown. Others act identically.

Figure 2. OFF Isolation Test Circuit

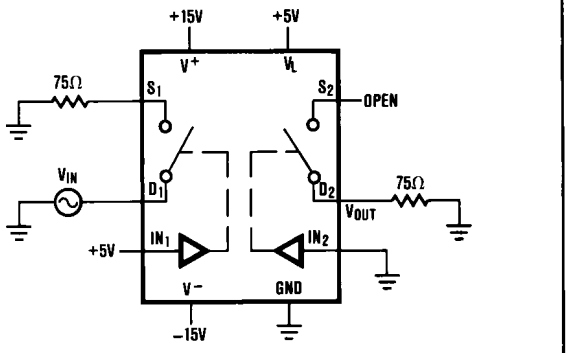

V_{IN} 225mVrms @ f = 10MHz

CCRR = $20 \log \frac{V_{IN}}{V_{OUT}}$

Figure 3. Cross-Coupling Rejection Test Circuit

Dual/Quad RF/Video Switches

Pin Configurations (continued)

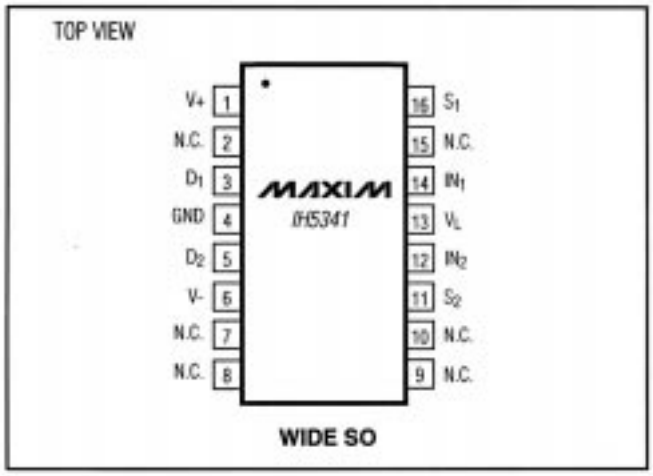

Chip Topographies

IH5341

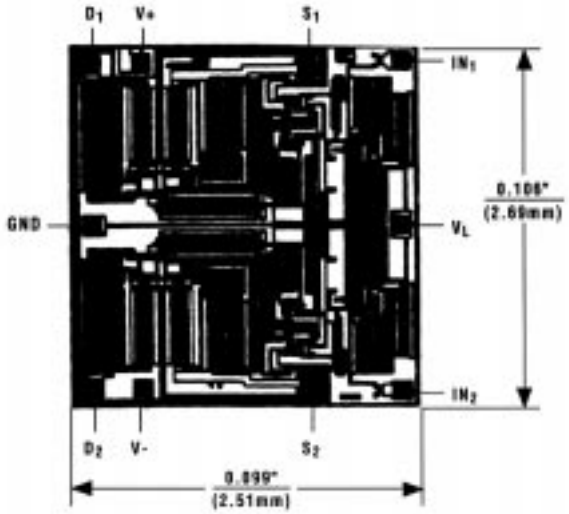

TRANSISTOR COUNT: 72

SUBSTRATED CONNECTED TO V+

IH5352

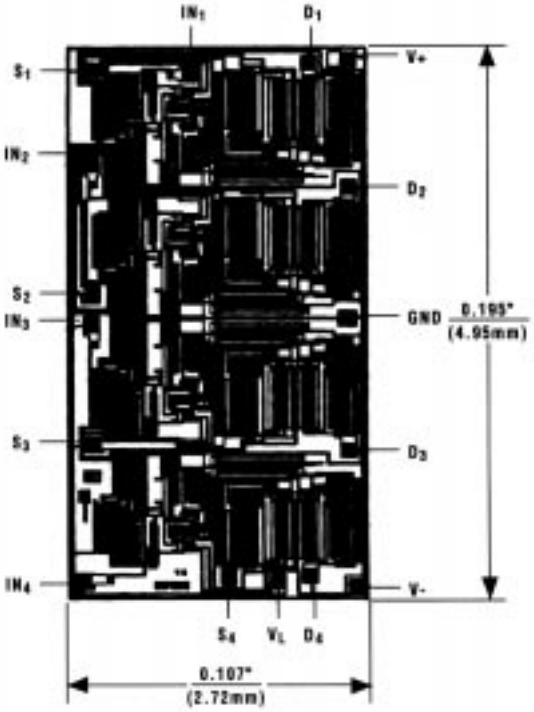

TRANSISTOR COUNT: 144

SUBSTRATED CONNECTED TO V+

Maxim cannot assume responsibility for use of any circuitry other than circuitry entirely embodied in a Maxim product. No circuit patent licenses are implied. Maxim reserves the right to change the circuitry and specifications without notice at any time.

© 1994 Maxim Integrated Products Printed USA MAXIM is a registered trademark of Maxim Integrated Products.